EAGLE CRUSHER®

ULTRAMAX® 1200-CV

This highly portable impactor plant is one of the most durable, reliable, and versatile plants for your medium-sized jobs.

PRIMARY FEATURES

- Easily transports in one pull. Check with your DOT.
- 1 Optional electro-magnet is available as a cross-belt or in-line installation that stays on for transport.
- Hydraulic lift and leveling system enables quick set up and tear down by using the hydraulic run-on legs.
- 2 Totally self-contained, reliable diesel/electric or all-electric power. You won't have to worry about hydraulic leaks and failures shutting you down.
- Features the industry's first LIFETIME ROTOR WARRANTY on its solid-steel, three-bar,sculptured rotor—the industry's heaviest—to keep you up and crushing.*

** North America only.*

LIFETIME ROTOR WARRANTY

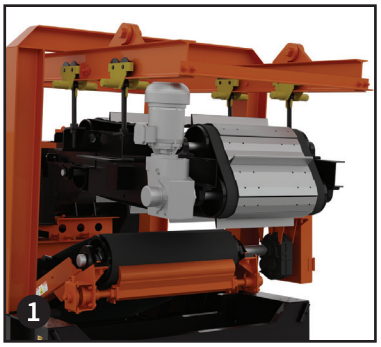

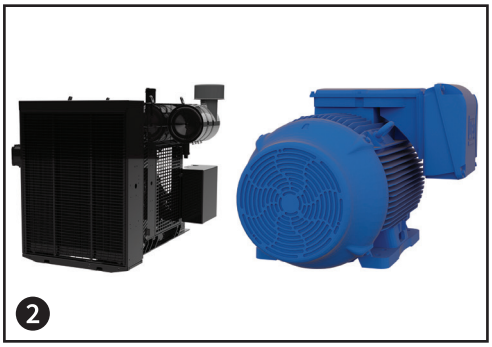

ADDITIONAL FEATURES

- Replaces dual crusher systems for a much lower initial investment and for greatly reduced maintenance, fuel and transportation costs.
- Features standard grizzly bypass chute and available cross-belt conveyor with flop gate to allow for either removal of the material that passes through the grizzly deck for stockpiling or blending back with the crushed material.
- Features unique two-step, 5' grizzly deck to remove fines before crushing.
- Utilizes side-discharge conveyor (OC model) with receiving hopper and replaceable liners, optional full-length skirtboards and available, in-line electro-magnet that stays on for trailer transport.
- Side-discharge conveyor (OC model) is available in road-portable version.
- Includes removable electrical control panel featuring pre-wired receptacles for radial stackers.
- Manage the feeder speed for complete control of the flow of material into the impactor with Variable Frequency Drive (VFD).
- Includes wireless remote control for the feeder shutdown and all motor stop.

ULTRAMAX® 1200-CV

CV model is featured. The 1200-25 is also available as an open circuit (OC) model.

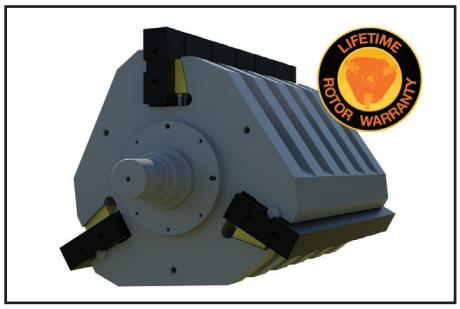

Solid-steel, three-bar, sculptured rotor with LIFETIME ROTOR WARRANTY, North America only.

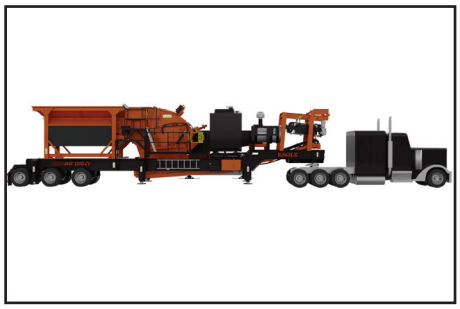

Easy, one-pull transport. Check with your DOT.

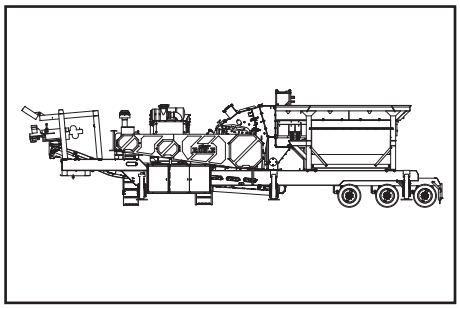

*1200-25 CV PORTABLE IMPACTOR PLANT TECHNICAL SPECIFICATIONS**

Model	
Impactor	UM-25
Operating Length	52' 0" / 15.9M
Gross Weight	96000lbs / 43500kg
Travel Length	48' 10" / 14.9M
Travel Width	11' 11" / 3.6M
Travel Height	13' 5" / 4.1M
Feed Hopper Capacity	17yd^3 / 13.0M^3
Feed Hopper Capacity (Tons)	23.0T / 20.9MT
Vibrating Feeder	18' x 45.5" / 5.5M x 1.2M
Feeder Grizzly Deck	60” long 2 step / 1524mm 2 step
On-Plant Power Supply Diesel	450HP / 335kW diesel engine and 140kW generator or
On-Plant Power Supply Electric	300HP / 224kW all-electric power
Discharge Conveyor Width	42" / 1067mm
Discharge Conveyor Height	8' 6.5" / 2600mm

*ULTRAMAX® IMPACTOR MODEL AND SPECIFICATIONS**

	Diameter x Width	Width x Height				
Model	**Rotor** (Inches / Millimeters)	**Feed Opening** (Inches / Millimeters)	**Power Required** (HP / kW)	**Approx. Weight** (lbs / kg)	**Rotor Weight** (lbs / kg)	**Production Capacity****
UM-25	47 x 47 / 1194 x 1194	48 x 34 / 1219 x 864	150 - 300 / 112 - 224	34000 / 15400	13000 / 5900	Varies by application.

*Design specifications subject to change without notice.

**Contact your Eagle Sales Representative with your specific application for anticipated production capacity.

Call 800-25-EAGLE (800-253-2453) or visit www.EagleCrusher.com
525 South Market St., Galion, OH 44833 • 419-468-2288 • fax: 419-468-4840 • email: sales@eaglecrusher.com

EAGLE CRUSHER®

Rev 06/2026

©2026 Eagle Crusher Company, Inc.